# Tunnel Boom for 20 Ton Excavator Shortened Boom for Tunnel and Basement Confined Space Work Long Arm Excavator

Our Product Introduction

## Basic Information

- Place of Origin: Guangdong, China
- Brand Name: ZHONGHE
- Certification: CE
- Model Number: EX225
- Minimum Order Quantity: 1 piece
- Price: $6500/pieces
- Packaging Details: Bubble bag packaging
- Delivery Time: 20-30 work day
- Payment Terms: T/T
- Supply Ability: 5 Piece/Pieces per Month



## Product Specification

- Brand Name: ZHONGHE
- Product Name: Excavator Tunnel Arm
- Application: Mining And Construction
- Moving Type: Crawler Excavator
- Material: Q355B/Q690D
- Color: As Customer Requirements
- Warranty: 6 Months
- MOQ: 1 PCS
- Condition: 100%New
- Packing: Standard Packing
- After-sales Service: Video Technical Support



for more products please visit us on excavatorlongarm.com

## More Images

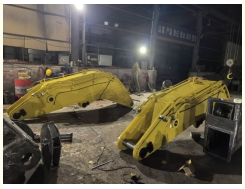









Our Produc

## Product Description

for more products please visit us on excavatorlongarm.com




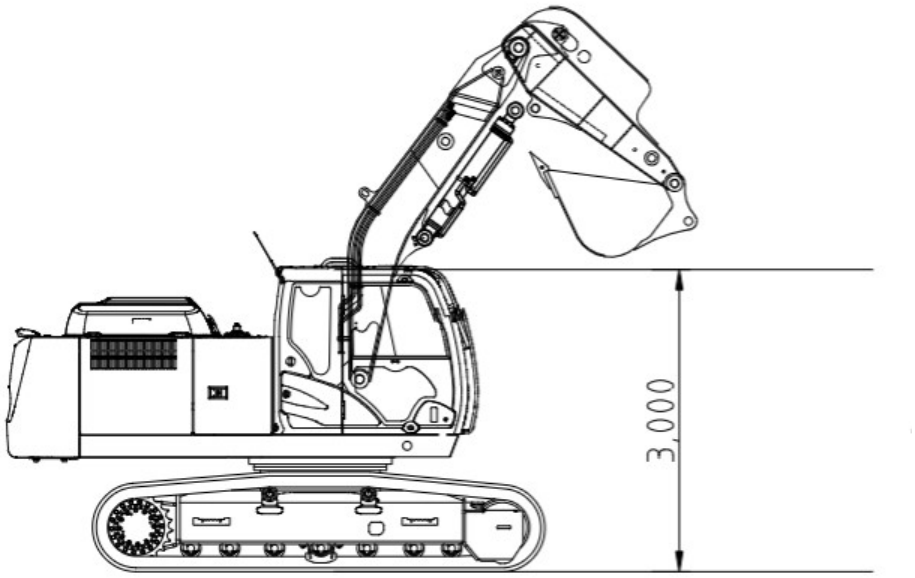


| 挖机 Excavator (ton) | 大臂 Boom (mm) | 小臂 Arm (mm) | 最大挖掘高度 Max Height (mm)(B) | 最大挖掘深度 Max Depth (mm)(A) |
|---|---|---|---|---|
| 6-10T | 3300 | 1760 | 6900 | 2430 |
| 12-18T | 3200 | 1970 | 7780 | 3300 |
| 20-25T | 3500 | 2400 | 9100 | 3310 |
| 30-36T | 4200 | 2520 | 9820 | 3950 |
| 40-45T | 3900 | 2910 | 9980 | 3550 |

## PRODUCT DESCRIPTION

### What is an excavator tunnel arm

**The tunnel arm generally refers to a working device that works in a narrow space. It is mostly used in tunnels, so it is called a tunnel arm. In Hong Kong, it is called a dungeon arm or a fireplace arm. In Taiwan, it is called a naughty leopard. There are various names, but in China Popularly known as tunnel arms.**
**Suitable for tunnels or other narrow working conditions. The tunnel arm can carry a breaker that is one model larger than the standard arm, increasing work efficiency. The forearm is filled with iron sand to increase its weight, which can suppress the breaker hammer more forcefully and reduce rebound. The bucket arm cylinder is placed underneath to reduce cylinder damage and failure.**

### Standard Configuration

**1 set boom and arm, stick cylinder, bucket cylinder, linkage assembly, 7 pins, 6 high-pressure hoses, 1 set breaker hydraulic lines, 2 stop valves.**







## Advantages

1. Long-lasting Durability
For our tunnel booms designed for excavators with a capacity of 30 tons or more, we utilize steel plates with a thickness of 20–30 mm. This design ensures a service life that far exceeds that of the original equipment manufacturer's (OEM) booms.

2. Operational Convenience and Innovative Design
The intermediate cylinder of the tunnel boom is positioned underneath, ensuring an unobstructed workspace and greater ease of operation. Additionally, we have incorporated protective covers for the bucket cylinders to prevent damage from falling debris.

3. Enhanced Efficiency
The tunnel dipper arm is filled with internal material, which helps dampen the recoil of the hydraulic breaker and improves overall impact efficiency.

4. Product Robustness
We employ a three-layer welding process to ensure superior weld quality and overall product integrity. Alloy steel bushings are also available, tailored to specific customer requirements.

5. High-Precision Seamless Piping
All hydraulic lines consist of 1.2-inch thick-walled seamless piping, which significantly reduces the risk of pipe bursts. We use high-quality, original-specification shut-off valves for an extended service life, and we utilize premium-grade Ningbo-manufactured fittings for all welded connections.

6. Reduced Failure Rate
We use oversized bucket cylinders to minimize the most common issue encountered with tunnel booms: the bending of the piston rod. For instance, our units for 20-ton excavators feature 30-ton class bucket cylinders; those for 30-ton excavators use 45-ton class cylinders; and those for 45-ton excavators are equipped with 65-ton class cylinders—all designed to lower the frequency of mechanical failures.








## High effectiveness

1.On the same machine, tunnel arm can obtain greater lifting capacity than standard arm。
2.Opening angle between boom and arm can reach 180 degrees

## Robust structure

1. The upper and lower cover plates are thicker.
2. The arm is filled with iron sand to reduce vibration
3. Robust cylinder guard



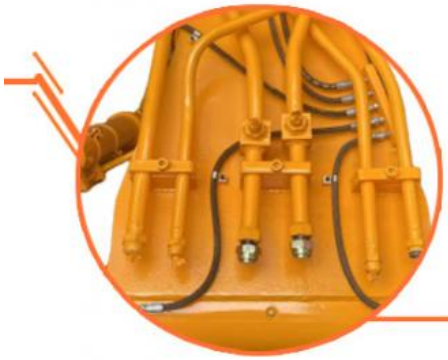

## Avoid oil leakage

1. Stop valves prevent oil leakage when replacing breaker by bucket.
2. Multi-layer welding for pipe connectors

## Long service life

1. Cylinder protective cover design
2. Q355B material, high-quality accessories, full weld, reinforced stress position, etc.





## Pivot end

HD Boom with pivot end




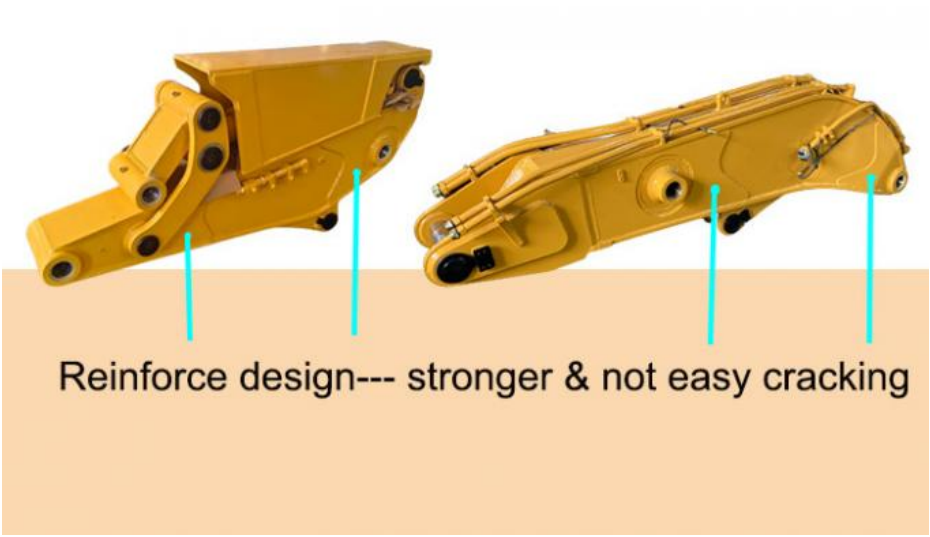


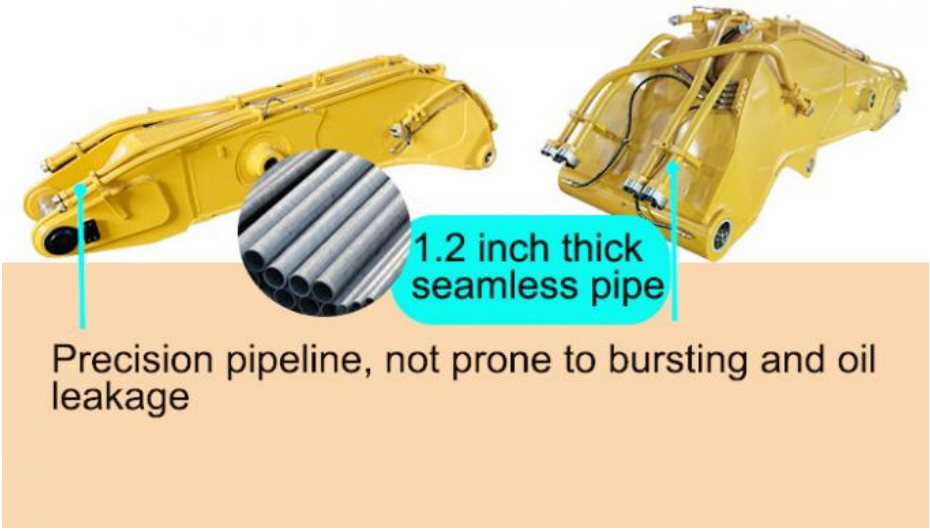


### Key Features of Excavator Tunnel Arm

**Compact Design for Urban Areas:** Ideal for projects in densely populated locations.
High Precision Digging: Allows for accurate excavation in sensitive environments.
**Versatile Applications Across Industries:** Useful in construction, landscaping, and mining.
**Minimized Soil Disruption:** Designed to reduce disturbance to surrounding soil.
**Robust Construction Quality:** Built to handle heavy loads and demanding conditions.
**Quick and Easy Attachment Changes:** Facilitates fast switching between tools.
**Greater Digging Depth Potential:** Short arms can reach deeper for various tasks.
**Optimized Hydraulic Efficiency:** Engineered to use hydraulic power effectively.
**Enhanced Safety Features:** Focuses on operator safety in challenging environments.
**Stable and Efficient Operation:** Ensures reliability during excavation projects.






**Working Condition**

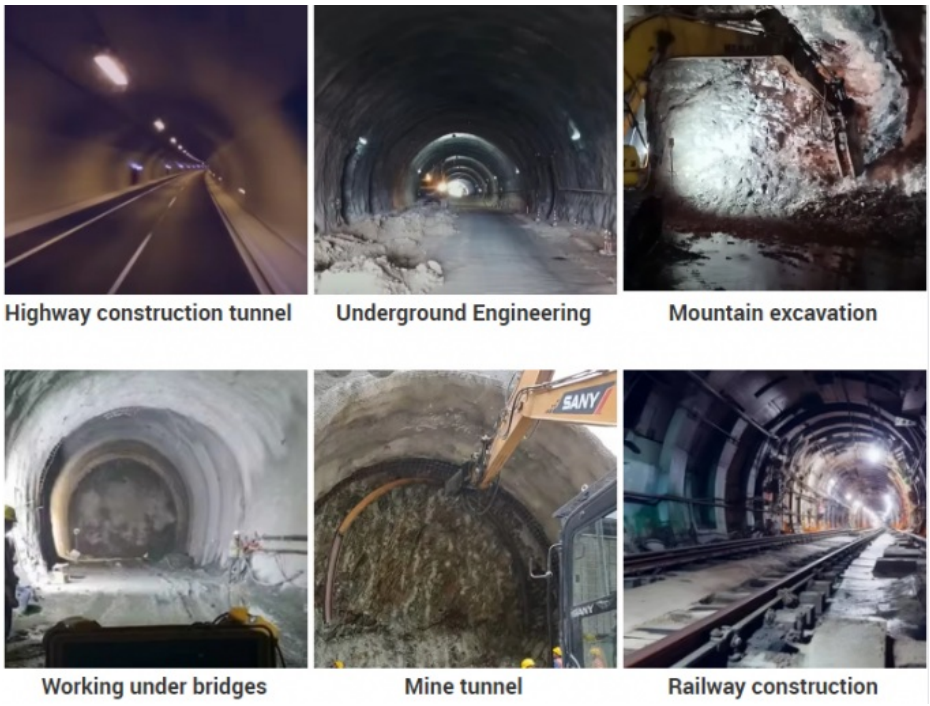


## Pictures Display






### ZHONGHE Product Advantages

**1. Fashionable style**
**2.Professional Team**
**3.Quality control**
**4.Moderate price**
**5.CE certification**
**6.Promptly answer**
**7.Patented technology**
**8.Enrich production experience**

### ZHONGHE triple quality control system

**1.The first system is the technical design drawing review mechanism.**

**2.The second system is the semi-finished product review mechanism.(each process has a detection testing for the previous process)**

**3.The third system is the finished product testing.(Before painting, the overall inspection is carried out**

**to check whether the design size matches the welding size, and whether the installation size meets the design requirement.)**
**To sum up, every single ZHONGHE product has been passed the above three-stage inspection system to ensure that is qualified before shipping.**

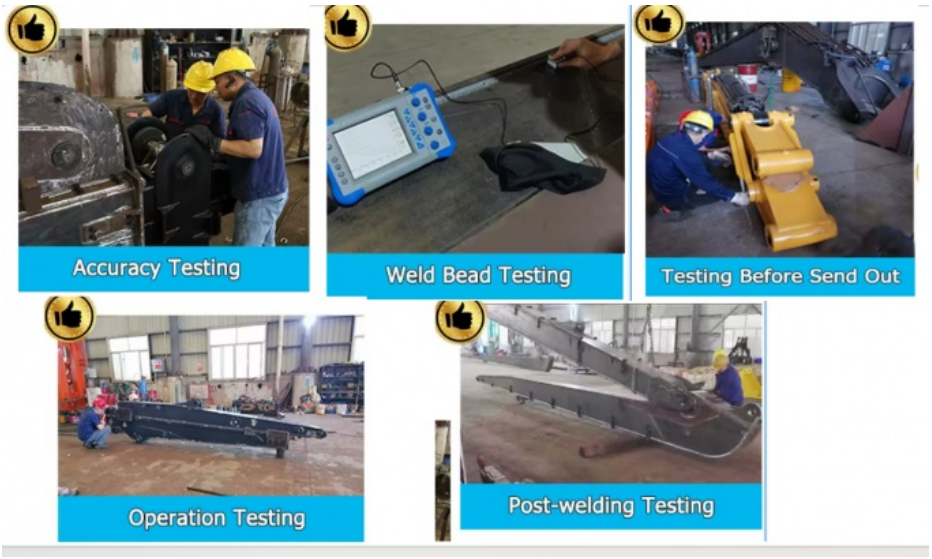


## Quality Advantage Comparison

**Solder: Goldenbridge brand welding wire ensures solid and crack-resistant welds for heavy-duty working.**

**Connectors: Premium Ningbo hydraulic connectors with accurate threads, excellent sealing and leak-proof performance.**

**Steel: Steel plates processed with edge-mining, which improves welding penetration and overall structural strength.**




## COMPANY PROFILE

众合机械

**About us**

Established in 2018, Kaiping Zhonghe Machinery Manufacturing Co., Ltd. is a combination of manufacturing and trading, specializing in customizing different kinds of excavator boom arms and attachments. Our products, including excavator long reach booms, demolition arms, 2-3 sections telescopic arms, tunnel arms, standard/rock buckets, grapples, and rippers, have been selling well in more than 60 countries and areas.

We are located in Cuishanhu New District, Kaiping City, Jiangmen City, GuangdongProvince, China, and we boast a 18000m2 steel structure workshop with a large number of high precision processing equipment and a strong and cohesive team of over 100 experienced technical staff, 50,welding workers with over 7 years experience, 30 senior designers, and a high-tech R&D team(10+ years on customization,100+ technical patents).strict production system (6+ years quality control and cost control) and warm-heart service team. Our annual output of various types of excavator boom arms can reach up to 600 sets.

Kaiping Zhonghe Machinery Manufacturing Co., Ltd, are committed to providing our customers with products of the highest quality at a moderate price, with quick response and appropriate warranty. We strive to uphold our core principles of "Merit Quality,Sincerity Management,and Customer Satisfaction".










## Certificates




## Exhibition



## OUR CUSTOMERS

*Our products are stable used in Australia, New Zealand, Norway, Sweden, USA, Canada, Austria, Ireland, Britain, Malaysia, Philippines, Mauritius, Reunion, Kenya, Ecuador, Chile, etc*

## SHIPPING & PACKAGE

Package
Bubble bag packing for most products;
Wooden case for little products, like buckets;
Iron frame support fro boom arms.
The accessaries and package of excavator long boom arm are subjected to our final confirmation.











## PRODUCT CATEGORY




Long Reach Boom



Sliding Arm



Two-section Telescopic Arm



Three-section Telescopic Arm



Pile Driving Arm




Tunnel Arm

## PRODUCT CATEGORY



Rock Bucket



Standard Bucket



Tilt Bucket



Ditch Cleanning Bucket



Skeleton Bucket



Rock Ripper

KOMATSU CAT HITACHI VOLVO SUMITOMO

KOBELCO DOOSAN CASE KATO HYUNDAI

JCB LIEBHERR ATLAS TEREX Kubota YANMAR TAKEUCHI IHISCE

SANY SDLG 山东临工 山重建机 STRONG JCM SHANTUI LOVOL 福田雷沃重工 厦工 XGMA LiuGong 柳工

LISHIDE 力士德 ZOOMLION XCMG LONKING 龙工 SUNWARD 山河智能

# HOT CUSTOMIZED PRODUCTS

Goods that people like to customize



## Long Reach Excavator Boom

- Long Reach Boom /
- Three Sections Demolition Arm /
- Demolition Extension Arm /

Customize now



## Demolition Boom

- Long Demolition Boom /
- Super Long Demolish Distance /
- Safe Demolition /

Customize now



## Telescopic Boom

- Three-stage Extension /
- Super Long Control Distance /
- Flexible Expansion /

Customize now




## Bucket

- Replaceable Fork Tines /
- Heavy Durable Bucket /




## Wood Grabber

- Mechanical Hydraulic Shear /
- Excavator Rotating Grapple /

**CONSTRUCTION**
**HEAVY EQUIPMENT**

WhatsApp+8615362217237
Mail: Iris@excavatorlongarm.com



**Jiangmen Kaiping Zhonghe Machinery Manufacturing Co., Ltd**

+86 13822325403 aria@excavatorlongarm.com excavatorlongarm.com

9 Huancui West Road, Cuishanhu New Area, Kaiping City, Guangdong Province, China